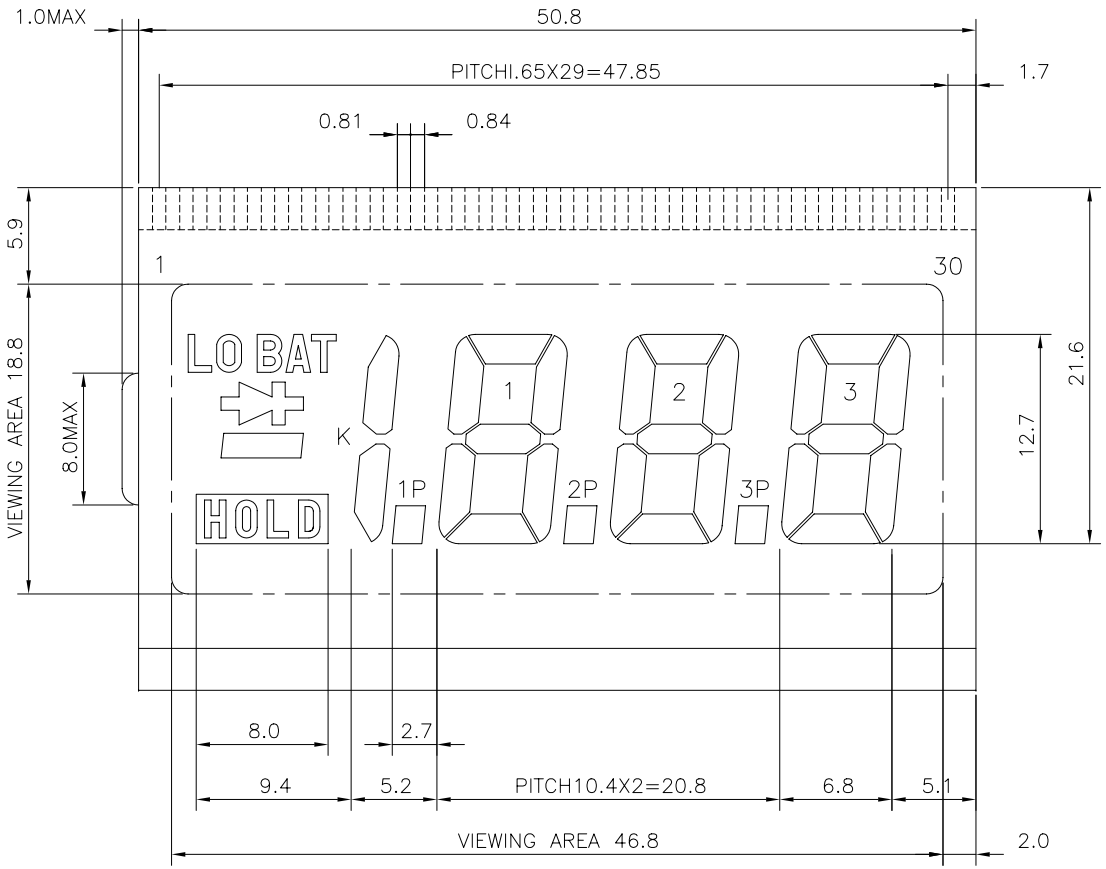

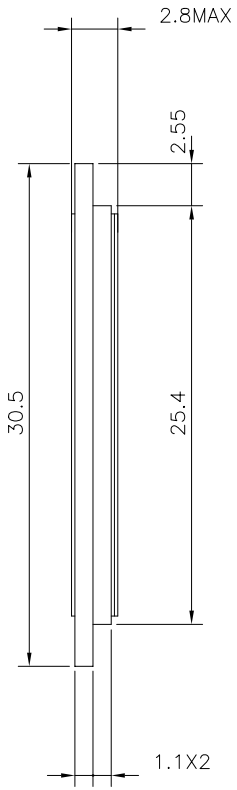

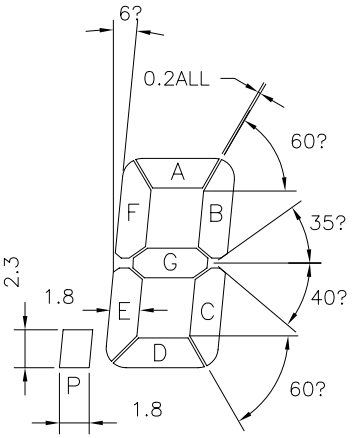

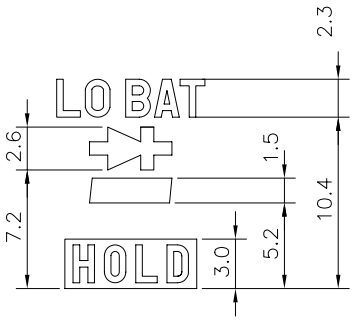

CHARACTERISTICS:

1)OPERATING VOLTAGE: 3.0V
2)OPERATING TEMPERATURE: 0°C TO 50°C
3)STORAGE TEMPERATURE: −10°C TO 60°C
4)DRIVING METHOD: STATIC
5)VIEWING DIRECTION: 6 O'CLOCK
6)DISPLAY TYPE: REFLECTIVE

TOL: ±0.2 UNLESS SPECIFIED

1	2	3	4	5	6	7	8	9	10	11	12	13	14	15
COM	—	✚	LO BAT	K	1P	1E	1G	1F	1A	1B	1C	1D	2P	HOLD
16	17	18	19	20	21	22	23	24	25	26	27	28	29	30
2E	2G	2F	2A	2B	2C	2D	3P	3E	3G	3F	3A	3B	3C	3D

REVISION RECORD		REVISED BY	DATE
APPROVAL	COUNTER DRAWING	ENGINEERING SAMPLE	
APPROVED BY			
FULL NAME			
POSITION			
COMPANY NAME			
DATE			

PROJECTION

DRAWN BY TIAN JING	P/N	
CHECKED BY	OUR REF.	S5213-KB-NCR
APPROVED BY	SHEET	1 OF 1
SCALE 3 : 1	UNIT	MM

S5213 DATE 28-1-92

CLOVER DISPLAY LIMITED